HAL
open science

# Galileo L1 civil receiver tracking loops' architecture

Olivier Julien, Gerard Lachapelle, Me Cannon

## To cite this version:

Olivier Julien, Gerard Lachapelle, Me Cannon. Galileo L1 civil receiver tracking loops' architecture. ISCAS 2007, IEEE International Symposium on Circuits and Systems, May 2007, New Orleans, United States. pp 1737 - 1741, 10.1109/ISCAS.2007.377930 . hal-01021800

**HAL Id: hal-01021800**

**https://enac.hal.science/hal-01021800v1**

Submitted on 20 Nov 2014

**HAL** is a multi-disciplinary open access archive for the deposit and dissemination of scientific research documents, whether they are published or not. The documents may come from teaching and research institutions in France or abroad, or from public or private research centers.

L'archive ouverte pluridisciplinaire **HAL**, est destinée au dépôt et à la diffusion de documents scientifiques de niveau recherche, publiés ou non, émanant des établissements d'enseignement et de recherche français ou étrangers, des laboratoires publics ou privés.

# Galileo L1 Civil Receiver Tracking Loops' Architecture

Olivier Julien
Laboratoire de Traitement du Signal et des Télécommunications
Ecole Nationale de l'Aviation Civile
Toulouse, France
ojulien@recherche.enac.fr

Gérard Lachapelle, M. Elizabeth Cannon
Department of Geomatics Engineering
Schulich School of Engineering
University of Calgary, Canada

***Abstract*—This paper introduces the main modulation improvements brought by the future Global Navigation Satellite Systems (GNSSs) compared to the currently available GPS C/A signal. Its impact on the code and phase tracking performance is illustrated and its implication on the design of these two tracking loop design is analyzed.**

## I. INTRODUCTION

Global Navigation Satellite Systems (GNSSs) is at the beginning of a new era with the modernization of GPS and GLONASS or the upcoming launch of the future European GNSS, Galileo. These new systems were designed to better answer the growing user community. Among other performance criterions, an increase of accuracy, sensitivity and resistance to multipath and interference was expected.

Current GPS C/A ranging signals are based on Code Division Multiple Access (CDMA) principles to distinguish the signals received from each transmitting satellite. They are composed of a carrier modulated by a binary Non-Return to Zero (NRZ) navigation data and a binary NRZ spreading sequence, resulting in a Phase Shift Keying (PSK) modulation. Code and phase tracking of these signals is classically based on a Delay Lock Loop (DLL) / Phase Lock Loop (PLL) architecture, although the PLL has to be a Costas loop in order to be protected from the effect of the navigation data bit transitions.

In order to improve the associated aforementioned tracking performances, several modulation innovations were proposed for the future Galileo L1 civil signals. The two main ones are (1) the use of a Binary Offset Carrier (BOC) modulation instead of a PSK modulation, and (2) the availability of a dataless component in quadrature-phase with the traditional data component. This paper aims at presenting the direct impact of these two innovations on the GNSS tracking loop architecture, tracking performances and to propose possible innovative architectures to take the best of the new signals. Both theoretical and experimental results are shown along the paper.

After a brief introduction, the first part of the paper focuses on the PLL architecture. In particular, the gain in terms of tracking sensitivity and resistance to thermal noise obtained from the availability of a dataless channel is underlined. Finally, a new PLL architecture using both the data and dataless components of the new signals to better mitigate thermal noise is proposed and tested.

The second part of the article focuses on the receiver DLL architecture. The improvement brought by the BOC modulation and the dataless component over the current GPS ranging signal modulation is underlined for thermal noise- and multipath-induced errors.

## II. LEGACY GPS CIVIL SIGNAL AND GALILEO L1 OS SIGNAL DEFINITION

Current GPS L1 C/A signal uses a BPSK modulation and can thus be modeled as [1,2]:

$$S_{L1}^{GPS}(t-\tau)=\sqrt{2P}\left(c_d^{GPS}(t-\tau)d^{GPS}(t-\tau)\right)\cos\left(2\pi f_{L_1}t+\phi\right) \quad (1)$$

where $P$ is the incoming signal power, $c_d^{GPS}$ is the materialization of the spreading code (with a chip rate of $f_c = 1.023$ MHz), $d^{GPS}$ is the materialization of the navigation message data bit, $f_{L_1}$ is the frequency of the incoming signal's carrier (1575.42 MHz), $\tau$ is the code delay of the incoming signal, and $\phi$ is the carrier-phase of the incoming signal.

Since it is currently the only available civil signal, GPS C/A will be considered in the rest of the paper as the reference signal to quantify the tracking improvement brought by the future Galileo E1 OS signal. Assuming the same incoming power than the GPS legacy signal and the same delays in the propagation channel, Galileo E1 OS current baseline can be modeled as follows [3]:

1-4244-0921-7/07 $25.00 © 2007 IEEE.

$$S_{L1}^{GAL}(t-\tau)=\sqrt{P}\begin{pmatrix} c_d^{GAL}(t-\tau)SC(t-\tau)d^{GAL}(t-\tau) \\ +c_p^{GAL}(t-\tau)SC(t-\tau) \end{pmatrix}\cos(2\pi f_{L_1}t+\phi) \quad (2)$$

where $c_p^{GAL}$ and $c_d^{GAL}$ are the materialization of the data and pilot channels spreading codes (with a chip rate of $f_c$), $SC$ is a sub-carrier modulating the spreading sequence and $SC=\mathrm{sgn}(\sin(2\pi f_c t))$, and $d^{GAL}$ is the materialization of the Galileo navigation message data train for Galileo L1 OS.

The multiplication of the spreading code (chipping rate of n×1.023MHz) with a square-wave sub-carrier with a frequency equal to the m×1.023MHz leads to a BOC(m,n) modulation [4]. Thus, the current Galileo L1 OS signal uses a BOC(1,1) modulation. It can be seen that this signal is constituted of a dataless channel along with the traditional data channel (as in the GPS C/A case).

To be tracked, a typical SS-CDMA signal is first down-converted and then correlated with a local replica of itself. The use of this correlation value is key for efficient code and phase tracking. In order to be relevant, this correlation should be realized within a navigation data bit in order to not suffer from a phase inversion. This gives an in-phase and quadra-phase correlator output that can be modeled as [1,5]:

$$\begin{aligned} I &= \frac{\sqrt{P}}{2}R(\varepsilon_\tau)D\sin c(\pi\Delta fT)\cos(\varepsilon_\phi)+n_I \\ Q &= \frac{\sqrt{P}}{2}R(\varepsilon_\tau)D\sin c(\pi\Delta fT)\sin(\varepsilon_\phi)+n_Q \end{aligned} \quad (3)$$

where $R$ is the useful signal autocorrelation function (different for a BPSK or a BOC modulation), $\Delta f$ is the frequency difference between the incoming carrier and the locally generated carrier, $T$ is the correlation time, or coherent integration time, $\varepsilon_\tau$ and $\varepsilon_\phi$ are the code and phase estimation errors made by the tracking loops, $D$ is the value of the data bit during the integration period, $n_I$ and $n_Q$ represent the correlator output noise assuming an incoming thermal noise of PSD equal to $N_0/2$. In this case, they are uncorrelated and have a power of $N_0/4T$.

Having the correlator's output expression and the model of the two signals of interest, it is now possible to study in details how the new Galileo E1 OS will influence code and phase tracking.

## III. CARRIER-PHASE TRACKING

A typical PLL is represented in figure 1.

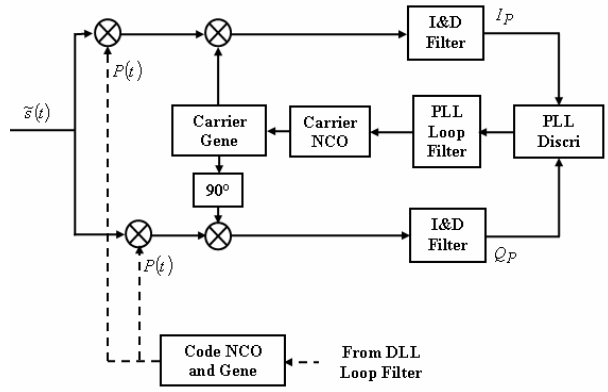


Figure 1. Generic PLL Architecture

When considering phase tracking, the availability of a dataless channel is of main interest for two main reasons: the absence of phase shift and the increase of the correlation time.

Data bit transitions can be seen, from a phase perspective, as 180° phase shifts. Thus, special phase discriminators have to be used in order to remove that effect during tracking and have a smooth estimation of the phase error. This is what is done using a Costas loop [1,6,7] to track GPS C/A carrier phase. Examples of phase discriminators for a data channel are [1,5,6]:

$$D_{DP}=IQ=\frac{P}{8}R_D^2(\varepsilon_\tau)\sin(2\varepsilon_\phi) \quad (4)$$

$$D_{A\tan}=\arctan(Q/I)=\varepsilon_\phi \quad (5)$$

If no data bit transitions are present, such as for the Galileo E1 OS pilot channel, then it is possible to use more efficient discriminators since no robustness against phase shift is necessary. Examples of phase discriminators for a dataless channel are [1,5]:

$$D_{Coh}=Q=\frac{\sqrt{P}}{2}R(\varepsilon_\tau)\sin(\varepsilon_\phi) \quad (6)$$

$$D_{A\tan 2}=\arctan 2(Q,I)=\varepsilon_\phi \quad (7)$$

Two main differences can be seen in these discriminators. The first one is that dataless discriminators have a wider linear region. The second is that the arctangent discriminators are dependent upon the level of noise in the correlator's output since a division is involved, while this is not the case for the other discriminators (assuming a perfect normalization). These characteristics can be observed in figure 2 for the considered discriminator types.

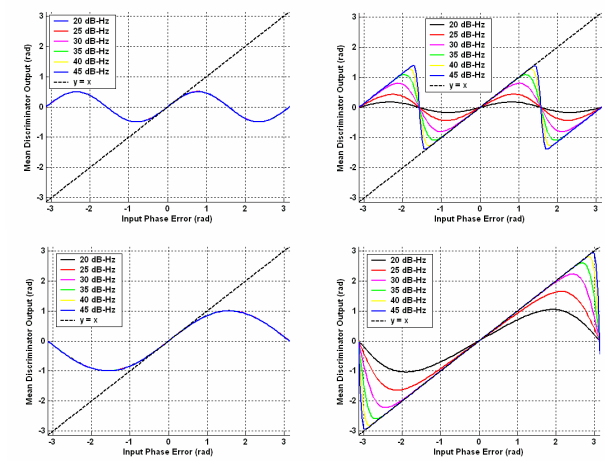


Figure 2. Mean DP (Top Left), Atan (Top Right), Coh. (Bottom Left) and Atan2 (Bottom Right) Discriminator Output for 6 $C/N_0$ (20, 25, 30, 35, 40, and 45 dB-Hz) and a 4 ms Coherent Integration Time

[1, 5, 8] enumerate the different sources of errors affecting phase tracking; thermal noise, interference, multipath, oscillator vibration, oscillator phase noise and dynamic stress. Obviously, the wider the linear region of the phase discriminator, the better it will be able to resist to large errors. The sensitivity of the carrier-phase loop can be defined as the minimum value of $C/N_0$ that fulfills the criteria:

$$3\sqrt{\sigma_{PLL,t}^2+\sigma_{PLL,Vib}^2+\sigma_{PLL,Osc}^2}+\theta_e \le \frac{L_\varphi}{2} \tag{8}$$

Where $L_\varphi$ is the linear region of the discriminator, $\theta_e$ is the tracking error induced by dynamic stress, $\sigma_{PLL,t}$ is the 1σ phase thermal noise tracking error, $\sigma_{PLL,Vib}$ is the 1σ oscillator vibrations tracking error, and $\sigma_{PLL,Osc}$ is the 1σ phase oscillator phase noise tracking error.

Using (8), it is possible to assess phase tacking sensitivity in specific situations. Results are shown for each considered discriminator in table I using the error model defined in [8] for a typical TCXO oscillator, assuming a jerk of 1 g/s, and a coherent integration of 4 ms.

TABLE I. OPTIMAL TRACKING THRESHOLDS AND LOOP BANDWIDTH FOR THE COHERENT, DP, ATAN AND ATAN2 DISCRIMINATORS

| | Tracking Thresholds | | | |
|---|---|---|---|---|
| | 20 ms | | 4 ms | |
| | PLL Loop Bandwidth | $C/N_0$ | PLL Loop Bandwidth | $C/N_0$ |
| **DP** | 20-30 | 32 | 14-28 | 30 |
| **Atan** | 14-24 | 24.5 | 11-30 | 28 |
| **Coh** | 17-16 | 26 | 12-19 | 24 |
| **Atan2** | 11-21 | 20 | 8-30 | 24 |

It can be seen that the use of a pilot channel improves, at equal incoming power, the loop sensitivity by approximately 4 to 6 dBs. Taking into account the fact that the Galileo power is split between the data and pilot channel, this gives a sensitivity improvement of approximately 1 to 3 dBs. It can also be mentioned that long coherent integrations benefit first to the arctangent discriminators, which is normal due to the dependence of their linear region with the post-correlation SNR seen in figure 2. Finally, It can also be observed that the loop bandwidth corresponding to the highest sensitivity is significantly lower for the dataless channel. This was expected since the wider linearity domain can bear higher signal dynamic and thus does not require the widening of the loop bandwidth. This is very important since a narrow loop bandwidth is an efficient way to mitigate interference-inuced errors and fastly-moving multipath.

The availability of a data and apilot channel in the same signal also allows trying to use both channels to gather as much power as possible and thus reduce further thermal noise. An interesting idea is to combine the data and pilot discriminators output to feed a unique phase tracking loop. The problem when doing so is to also keep the tracking robustness of the pilot channel (that is less susceptible to cycle slips than the data channel, as shown in table I). Indeed, it is more relevant to have a noisier phase measurement than a high susceptibility ot cycle slips. The proposed data/dataless combined discriminator is:

$$D_{Comb} = \gamma D_{Data} + \kappa D_{pilot} \text{ if } \left|\tilde{D}_{pilot}\right| \le L_{\varphi,D_{data}}/2 \tag{9}$$

$$D_{Comb} = D_{Pilot} \qquad \text{else}$$

where $\tilde{D}_{Pilot}$ is the filtered pilot discriminator output, and $L_{\varphi,D_{data}}$ represents the stability domain of the data discriminator.

Using this combined discriminator, the $\gamma$ and $\kappa$ values should be chosen optimally according to:

$$\gamma = \frac{\sigma_{D_{Pilot}}^2}{\sigma_{D_{Data}}^2+\sigma_{D_{Pilot}}^2};\ \kappa = \frac{\sigma_{D_{Data}}^2}{\sigma_{D_{Data}}^2+\sigma_{D_{Pilot}}^2} \tag{10}$$

Figure 3 shows the result of a simulation. Comb1 represents the constant combination of the data and pilot discriminators, Comb2 represents the use of the non-filtered pilot discriminator in (9), and comb3 shows the filtered pilot discriminator. It can be seen that tracking robustness is preserved and the tracking gain can be assessed equivalent to 2 to 3 dBs in terms of equivalent $C/N_0$.

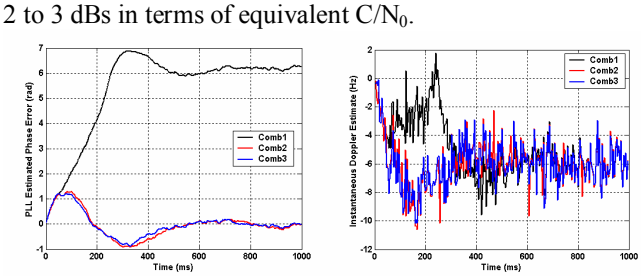

Figure 3. PLL Tracking Error using the Data/Pilot Implementation with a 4 ms Integration Time, a 30 dB-Hz $C/N_0$, and an Initial Doppler Offset of 6 Hz

## IV. CODE TRACKING LOOP

As already mentioned, future Galileo E1 OS modulation baseline is a BOC(1,1) modulation. Figure 4 shows the BOC(1,1) and BPSK(1) normalized DSPs and autocorrelations (with different front-end filter widths). It can be seen that the BOC(1,1) has a wider spectral occupation, which results in a sharper autocorrelation function. It is well-known that the sharper the autocorrelation function, the better the code tracking will be with respect to thermal noise mitigation. Thus, it can be anticipated that the BOC(1,1) modulation will be better than BPSK(1).

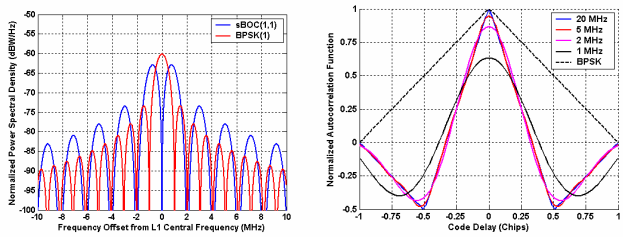


Figure 4. Normalized BOC(1,1) and BPSK(1) DSP and Autocorrelation Function According to the One-Sided Front-End Filter Bandwidth

A typical DLL architecture is represented in figure 5.

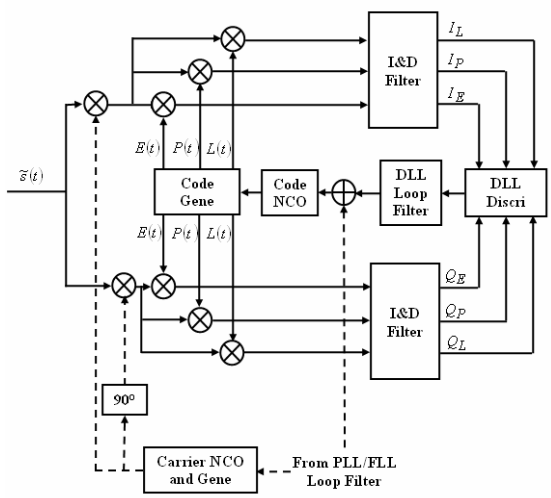


Figure 5. Generic DLL Architecture

Assuming a typical dot-product (DP) discriminator [1,5] and an infinite front-end, the resulting code tracking error resulting from thermal noise is given by [5]:

$$\sigma^2_{DP,\varepsilon_\tau} = \frac{B_L(1-0.5B_L T_I)\delta}{2\alpha\frac{P}{N_0}}\left(1+\frac{1}{\frac{P}{N_0}T}\right) \tag{11}$$

Where $B_L$ is the DLL loop bandwidth, $\delta$ is the early-late correlator spacing, and $\alpha$ is the slope of the main peak of the autocorrelation function.

Consequently, since the slope of the BOC(1,1) autocorrelation function is three times higher than the BPSK(1) one, there will be an improvement of the tracking error standard deviation of approximately 2 dBs. It has, however, to be kept in mind that this is at the expense of a wider bandwidth. For instance, it has to be thought that mass-market receivers often use limited bandwidth in order to reduce power consumption due to a high sampling rate. In that case, Galileo L1 OS will need a minimum bandwidth twice as large as the GPS C/A one.

It has also to be noticed that if the $C/N_0$ is low, the availability of a dataless channel allows the use of long correlations. In this case, the squaring losses are significantly reduced and it results in an even higher sensitivity. In such a case, it is often the phase tracking that limits the overall receiver sensibility due the small carrier phase wavelength.

One drawback with the use of a BOC modulation is the presence of side-peaks in the autocorrelation function (see figure 4). Indeed, these side-peaks can be considered as stable lock points by the code discriminator. In such a case, this can lead to biased measurements that could be a threat for precise positioning. The false lock points associated with BOC(1,1) modulation are situated approximately around 0.6 chips, or 180 metres away from the true tracking point. This means that in any case, a constant check on the correct tracking of the signal has to be done. Several methods were proposed to mitigate this false lock problem [5, 9, 10, 11]. They all require an increase in the number of correlators that implies more complicated receiver architecture.

Regarding multipath resistance, figure 6 shows the multipath-induced tracking envelope for a BOC(1,1) and BPSK(1) signals. It can be seen that for long delay multipath, BOC(1,1) significantly improves its inherent resistance. It has to be noticed that interesting multipath mitigation techniques dedicated to GPS and Galileo signals [12,13] were found and could improve the signal's performance. However, they require a higher complexity by using more correlators for instance..

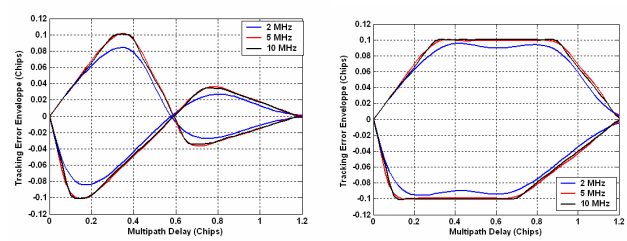


Figure 6. BOC(1,1) (Left) and BPSK(1) (Right) Multipath Resistance for Different One-Sided Front-end Filter Bandwidth

## V. CONCLUSIONS

It has been seen that the use of a dataless channel along with the traditional data channel brings a significant improvement to phase tracking. Indeed, not only it provides a higher tracking sensibility and robustness to the loop (around 3 to 6

dBs), but it also allows the use of a narrow PLL loop bandwidth that will better mitigate interference and fastly-changing multipath.

The use of a BOC(1,1) modulation by Galileo E1 OS improves code tracking compared to GPS C/A signal by approximately 2 dBs (standard deviation of the tracking error in thermal noise). However, it requires a higher minimal front-end filter bandwidth too. The main drawback of the BOC modulation is the potential for biased tracking that requires extra correlators to constantly monitor the tracking location.

## REFERENCES


[1] Van Dierendonck, A.J. (1997), *GPS Receivers* in *Global Positioning System: Theory and Application Volume I*, Progress in Astronautics and Aeronautics Volume 164, AIAA, pp. 329-408.

[2] Tran, M, and C. Hegarty (2002), *Receiver Algorithms for the New Civil GPS Signals*, Proceedings of the US Institute of Navigation NTM (San Diego, CA, USA, Jan. 28-30), pp. 778-789.

[3] Galileo Joint Undertaking (2005), *L1 Band Part of Galileo Signal in Space ICD (SIS ICD)*, 32 pages.

[4] Betz, J.W. (2002), *Binary Offset Carrier Modulations for Radionavigation*, Navigation: Journal of the Institute of Navigation, Vol. 48, Number 4, pp. 227-246.

[5] O. Julien, *Design of Galileo L1F Receiver Tracking Loops*, Ph.D. thesis, Department of Geomatics Engineering, University of Calgary, UCGE Report 20227, available at http://www.geomatics.ucalgary.ca/links/GradTheses.html.

[6] Peterson, R.L., R.E. Ziemer, and D. E. Borth (1995), *Introduction to Spread Spectrum Communications*, Prentice Hall.

[7] Misra, P., and P. Enge (2001), *Global Positioning System: Signals, Measurements and Performance*, Ganga-Jamuna Press.

[8] Irsigler, M., and B. Eissfeller (2002), *PLL Tracking Performance in Presence of Oscillator Phase Noise*, GPS Solutions, Vol. 5, No. 4, pp. 45-54.

[9] Nunes, F.D., F.M.G. Sousa, J.M.N. Leitão (2004), *Multipath Mitigation Techniques for BOC Signals Using Gated Functions*, CD-ROM Proceedings of Navitech 2004 (Noordwijk, The Netherlands, Dec. 8-10), 8 pages.

[10] Fine, P., and W. Wilson (1999), *Tracking Algorithm for GPS Offset Carrier Signals*, in Proceedings of the US Institute of Navigation NTM Conference, (San Diego, CA, Jan. 25-27), pp. 671-676.

[11] Garin, L. (2005), *The "Shaping Correlator", Novel Multipath Mitigation Technique Applicable to GALILEO BOC(1,1) Modulation Waveforms in High Volume Markets*, CD-ROM Proceedings of the European Navigation Conference GNSS (Munich, Germany, July 19-22).

[12] McGraw, G, and M. Braasch (1999), *GNSS Multipath Mitigation Using Gated and High Resolution Correlator Concept*, Proceedings of the US Institute of Navigation NTM (San Diego, CA, Jan. 25-27), pp. 333-342.

[13] Hegarty, C., M. Tran and J.W. Betz (2004), *Multipath Performance of the New GNSS Signals*, Proceedings of the US Institute of Navigation NTM (San Diego, CA, USA, Jan.), pp. 333-342.